HAMS HELPING HAMS

ARRL MENTOR PROGRAM

Discover the Magic Of

HF Radio

Welcome to Worldwide Communications

This presentation is designed to introduce the new or recently upgraded ham to HF radio.

Welcome to Worldwide Communications

The information presented here is very general.

Welcome to Worldwide Communications

More information can be found in the ARRL publications listed at the end of this program.

What Does HF Mean?

HF stands for HIGH FREQUENCY
These are the frequencies from 1.8* to 30 MHz or the 160 meter to 10 meter bands.

HF is also known as *shortwave*.

***160m is actually a Mid Frequency (MF) band but it is included in the Amateur HF bands for ease of discussion.**

How is HF different than FM repeaters?

- No “machine” or infrastructure is used.
- Allows communication beyond line of sight. Contacts are generally a couple of hundred miles to over several thousand miles.
- Propagation is strongly effected by solar activity.
- Several communication modes are available to use. SSB, CW, RTTY, SSTV, Digital, AM

HF Band Allocation

Meter Band	Frequency (MHz)	
	CW, RTTY, Data	Voice
160	1.800 - 2.000	
80	3.500 - 3.750	3.750 - 4.000
40	7.000 - 7.150	7.150 - 7.300
30	10.100 - 10.150	
20	14.000 - 14.150	14.150 - 14.350
17	18.068 - 18.110	18.110 - 18.168
15	21.000 - 21.200	21.200 - 21.450
12	24.890 - 24.930	24.930 - 24.990
10	28.000 - 28.300	28.300 - 29.70

Who Uses HF?

- Because of the ability to communicate over long distances, HF is used by many government, military, and commercial agencies worldwide.

Who Uses HF?

- **Amateur Radio operators all over the world use HF for the same reasons.**

Amateur Radio & HF

When most people hear the term "ham radio" they generally think of HF or shortwave and long distance communications.

Who Has HF Privileges?

In the U.S., any Amateur Radio operator with a General, Advanced or Extra Class license has HF privileges and is able to operate all modes at full power.

Who Has HF Privileges?

1. Technician class licensees who have passed the Element 1 CW requirement and Novice licensees have limited HF privileges.
2. As of April 15, 2000 the FCC stopped issuing <u>new</u> Novice and Advanced Class licenses.

HF is FUN

With a 100 watt transceiver and a simple wire antenna you can start to communicate and make friends with other hams all over the country or the world.

HF is FUN

1. We will talk about how and why radio waves can travel great distances around the world.

HF is FUN

2. We will talk about HF transceivers.
3. We will explain to you what some of the controls are on the radio and what it is that they do.

HF is FUN

4. We will talk about simple antennas that are:
    - very effective,
    - Inexpensive and
    - easy to construct and install.

HF is FUN

5. We will also talk about some of the ways that amateurs configure their antennas to affect where their signals are going to go.

HF is FUN

Let’s Get Started

Hearing Signals Out of Thin Air

How It Works

(Propagation)

Just as sailors use the natural forces and currents of wind and water to guide their boats, radio operators use naturally occurring charges in a layer of the atmosphere called the *ionosphere* to bend and reflect their radio signals.

Why It Works
(The Atmosphere)

- **The Earth’s atmosphere is made up of several layers or regions.**

Why It Works
(The Atmosphere)

- **We are most concerned with the uppermost region called the *ionosphere.***

  ***The ionosphere is part of the thermosphere and not a separate layer or region. For our discussion we will only refer to the layers that make up the ionosphere.**

The Role of Sol

How the Sun Opens and Closes The Bands

The Sun's energy causes atoms in the upper atmosphere to become charged. These charged particles are called *ions*.

This charged region of the upper atmosphere is called the *ionosphere.*

When a radio wave enters this region of charged particles, its direction of travel is altered.

Radio waves change direction when they enter the ionosphere

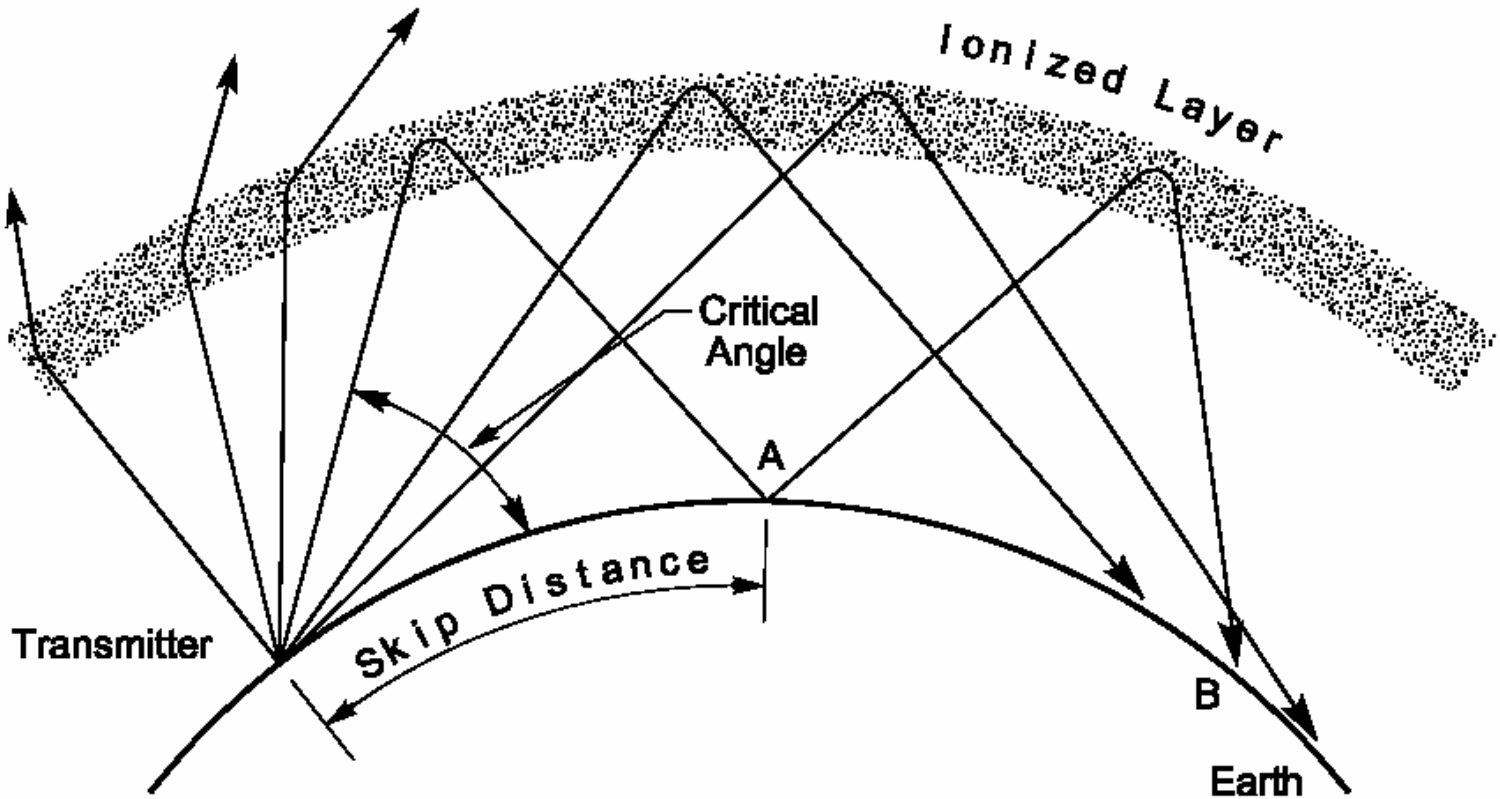

The Ionosphere

- The ionosphere is broken up into layers.
- These layers are the D, E and F layers.*

*There is no A, B, or C layer. These were reserved for possible future discoveries.

The Ionosphere

- The Sun’s UV radiation charges these layers and this affects radio waves and how they travel.

The Layers of the Ionosphere

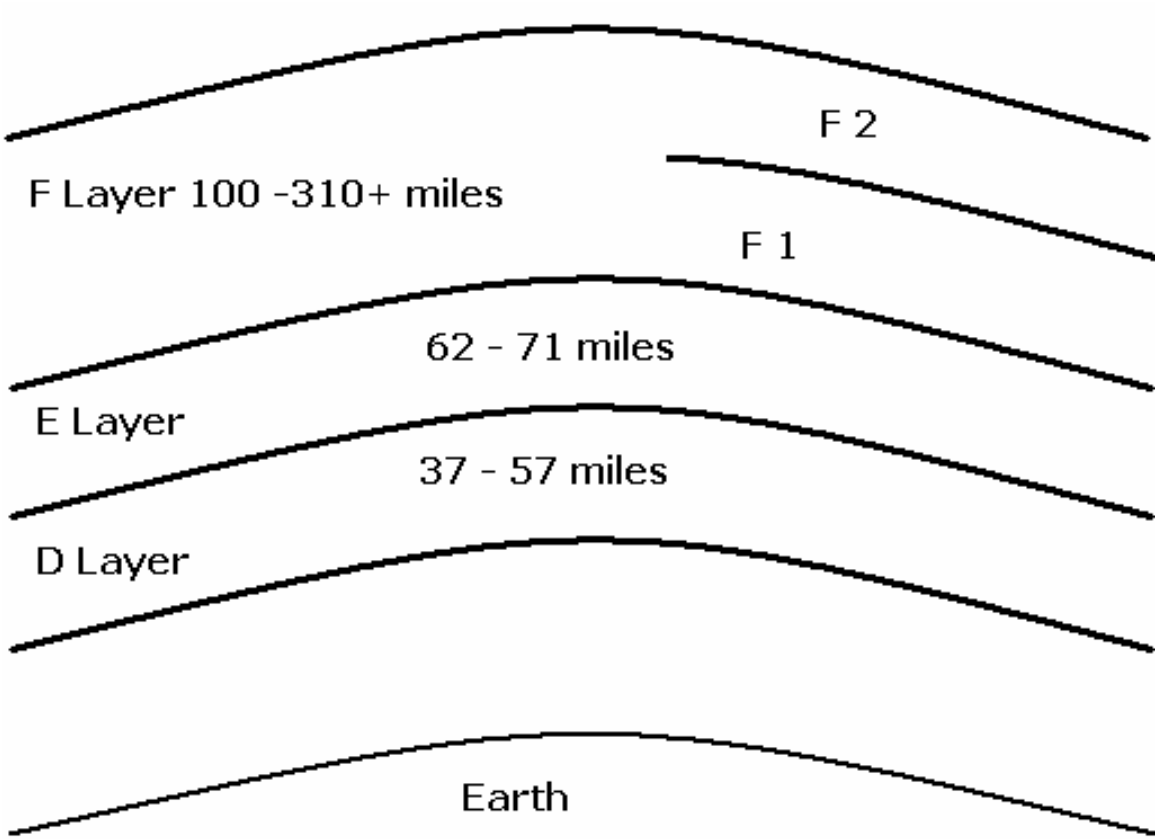

The D Layer

The D Layer is the lowest and densest region of the ionosphere. It extends 37 to 57 miles above the Earth’s surface.

The D Layer

Because of its density, the D-layer tends to absorb radio signals.

The D Layer

The absorption of RF varies by wavelength. Longer waves such as 160m and 80m are most effected.

The D Layer

D-layer effect is less on 40m, slight on 20m and inconsequential on the higher frequencies.

The D Layer

The ionization level of this lower part of the atmosphere is directly related to the sunlight.

The D Layer

Therefore, The D-layer begins at sunrise, peaks at noon and disappears at sunset.

The D Layer

The Sun's ionization of the upper atmosphere and creation of the D layer is what "closes" the low bands during the day.

The D Layer

The disappearance of the D layer at sunset “opens” the low bands and they will remain open throughout the night.

The E Layer

At 62 to 71 miles above the Earth, the E layer is the lowest portion of the ionosphere useful for long distance communications.

The E Layer

Ionization of the E layer occurs rapidly after sunrise and diminishes quickly after sunset. Minimum ionization of the E layer is after midnight, local time.

The E Layer

Like the D-layer, the E-layer absorbs long wavelength signals during the day.

The E Layer

Signal absorption is highest when the sun is at it's highest angle. (local noon)

The E Layer

The E layer effects other Amateur bands above 30 MHz but for now we will limit our discussion to the HF bands.

The F Layer

The F layer is the uppermost region of the atmosphere. It begins at approximately 100 miles and can extend to over 310 miles above the Earth's surface.

The F Layer

The F layer is responsible for most of our long distance communications.

The F Layer

Because this region is so far away from the Earth's surface it is less dense than the other regions.

The F Layer

It often takes a while for noticeable effects of the Sun’s radiation to develop but the charges can last long after sunset.

The F Layer

During the day in summertime the Sun’s radiation can cause the F layer to become two separate layers called F-1 and F-2 layers.

The lower F-1 layer doesn’t last long after sunset.

The F Layer

The effects of the Sun on the ionosphere change as the seasons change because the angle between the Sun and the Earth changes throughout the yearly cycle.

The F Layer

In the summer, during periods of high solar activity, it is not unusual to see bands like 10 and 15 meters stay open until midnight and 20 meters stay open all night.

Skipping Signals

In order to travel distances greater than “line of sight”, radio signals skip off the ionosphere and return to Earth.

Radio waves encountering the ionosphere above the critical angle don't get bent enough to return to Earth. Waves entering at angles below the "critical angle reach the Earth at increasingly greater distances as the launch angle approaches horizontal.

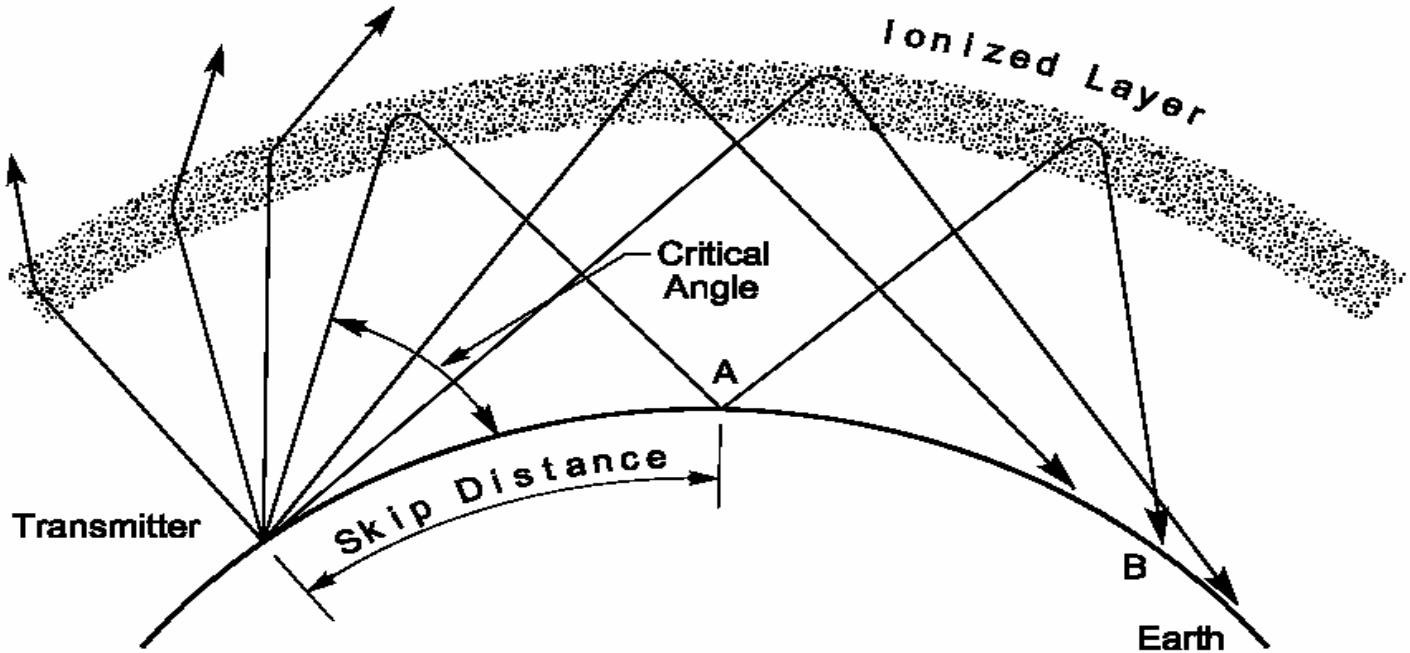

Skipping Signals

Like skipping a stone on a pond, if we send our signals off at very low angles they will make more hops and travel farther.

Skipping Signals

HF operators will configure their antennas so that they can direct their signals where they want them.

Skipping Signals

HF operators also know what frequency to use at different times of the day or season for effective communications.

Propagation

There are three basic types of propagation of HF radio signals:

1. **Sky-wave**
2. **Ground wave**
3. **High Angle Radiation (NVIS)**

Sky-Wave

The *Sky-wave* is the wave that travels to the upper regions of the atmosphere and gets reflected back to Earth by the ionized layers that we previously learned about.

Sky-Wave

The *Sky-wave* is the wave that is responsible for all of our long distance communications.

Sky-Wave

For long distance (DX) communications, Amateurs configure their antennas so that the radio waves take off at very low angles.

Ground Wave

Ground wave is the signal that radiates close to the ground from the Earth's surface up to the lower atmosphere or *troposphere* and is reflected or diffracted by the terrain.

Ground Wave

Ground waves are generally good for about 100 - 200 miles on HF during the day.

High Angle Radiation

NVIS

or

Near Vertical Incidence Sky-wave

NVIS

- **Radio Waves that take off at very high angles are reflected straight back to Earth.**

NVIS

- **Like squirting a hose at the ceiling, this technique allows you to blanket your signals over a significant area close to your station.**

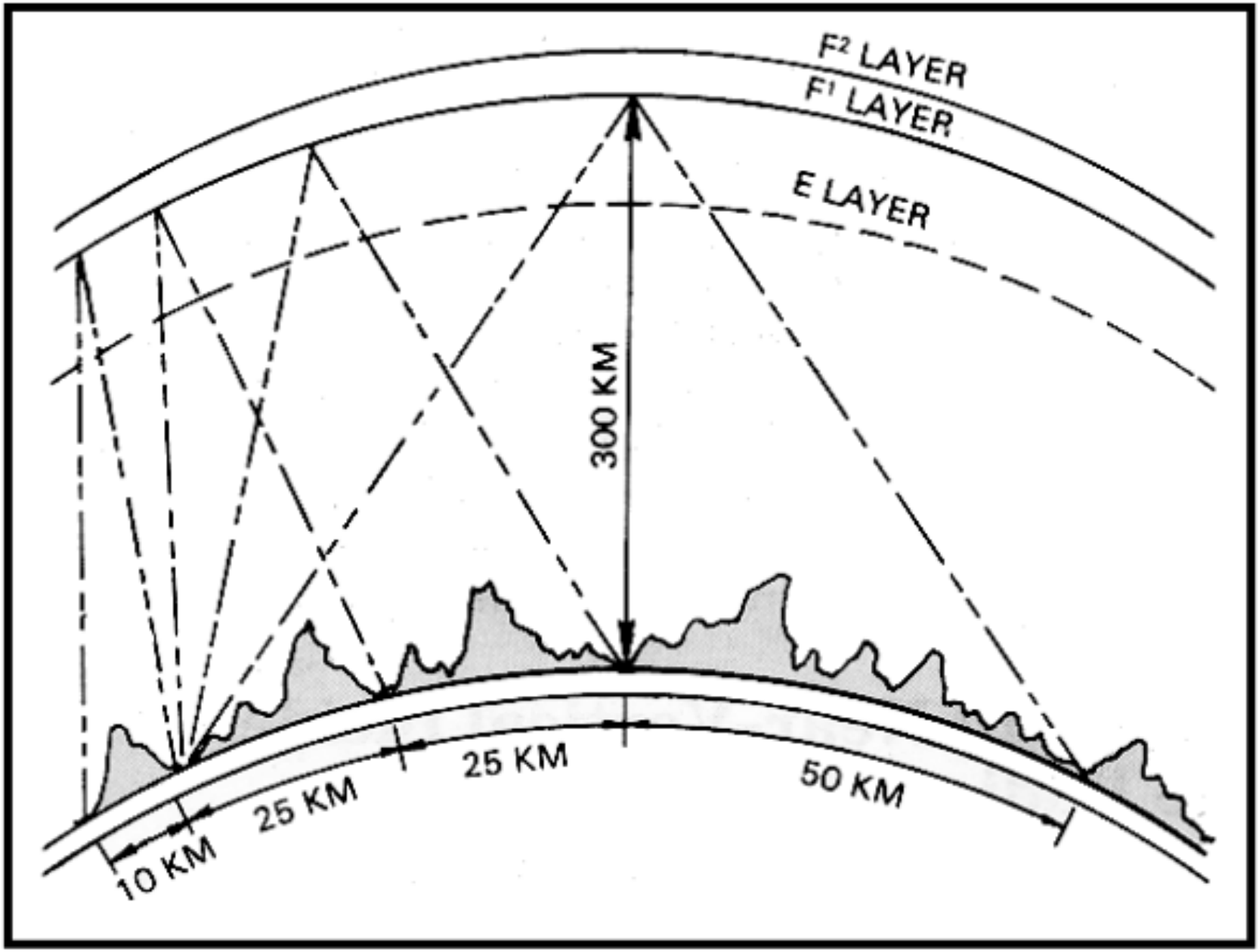

Figure M-1. Near-vertical incidence sky-wave propagation concept.

NVIS

- This technique will provide reliable communications within a 200 to 350 mile radius.
- Frequency choice for NVIS is typically 40m during the day and 80m at night
- Unlike the ground wave, NVIS signals are not affected by terrain.

The Gray Line

- The transition are between daylight and darkness is called the gray line.
- This area offers some unique and special propagation to the radio operator.

The gray line or terminator is a transition region between daylight and darkness. One side of the Earth is coming into sunrise, and the other is just past sunset.

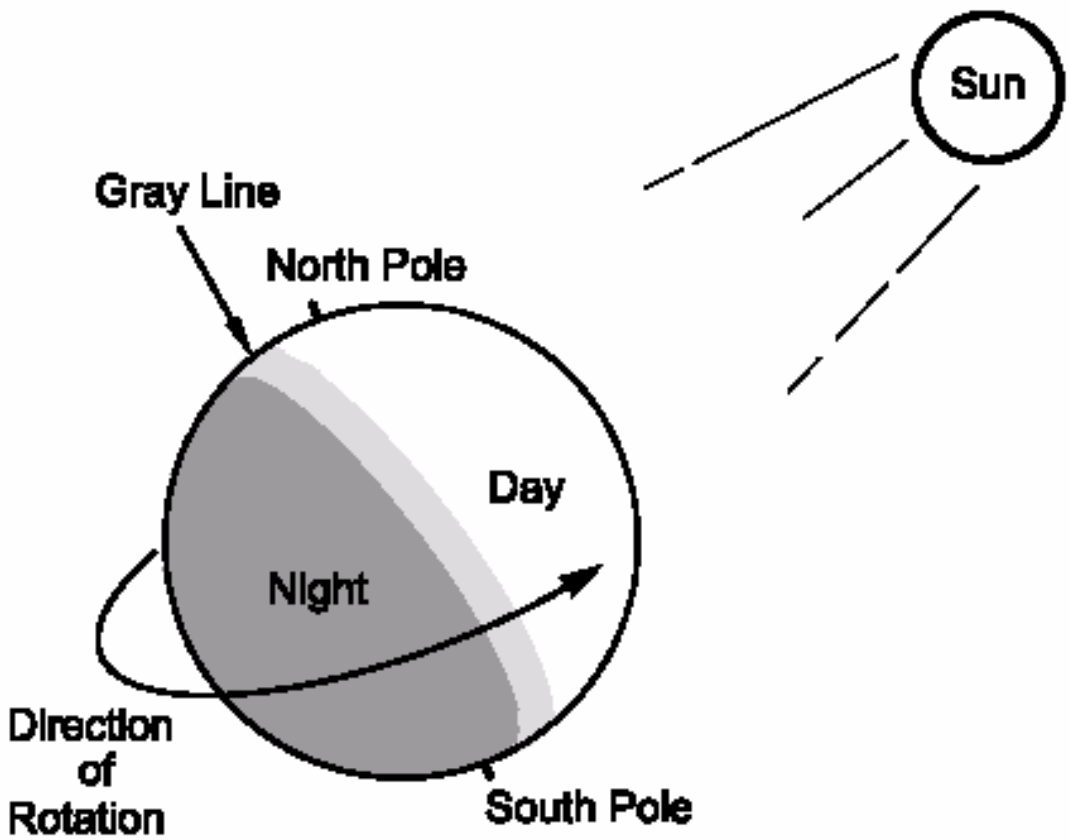

Building a Station

Building an effective HF station is very simple.

Building a Station

There are basically two main components involved:

1. **A 100 watt Transceiver and**
2. **An antenna *system.* The antenna system consist of the radiator, feedline and matching network.**

Building a Station

Accessories

As you become more involved in HF activity you will find that there are certain accessories that will make building and operating your station a little easier.

Transceivers

What is a *Transceiver*?

A transceiver is a single unit that acts as *trans*mitter and re*ceiver.*

Transceivers

- There are many transceivers on the market today.
- For our discussion will limit ourselves to the 100 watt, all mode class of transceivers.

Transceivers

All of the current commercially manufactured transceivers on the market today are state of the art and can provide good communications worldwide…

Transceivers

…some of the better units offer more sophisticated circuits designed to increase the receiver’s ability to hear weak signals.

Transceivers

You do get what you pay for. Commercial manufacturers tend offer units in a good, better, best category.

Transceivers

There are a lot of good values to be had in the used equipment market.

It is a good idea to consult an experienced operator before you buy a used piece of gear.

Transceivers

Whichever transceiver you choose, you can be assured of many years of operating pleasure from your investment.

A Word About "Classic" Radios.

You will often hear hams talk about old classics and rigs that they used back in the day.

A Word About "Classic" Radios.

Classic radios are like classic cars.

A Word About “Classic” Radios.

They’re nice to look at and fun to tinker with.

A Word About "Classic" Radios.

It's a thrill take them out for a spin and show them off once in a while.

A Word About "Classic" Radios.

However, for your daily use you want to have something that is <u>modern</u> and <u>reliable</u>.

A Word About "Classic" Radios.

Unless you are very talented and have a source for extinct components it is a good idea to avoid these "boat anchors" as a first or primary radio.

Transceivers

What makes a good radio?

Scanning, memories and other "bells & whistles" are *not* the important features that make a good HF rig.

Transceivers

What makes a good radio?

The receiver's ability to hear weak signals and separate the incoming signals are what makes a good HF rig.

Transceivers

What makes a good radio?

The numbers to look at when selecting a transceiver are:

sensitivity **(ability to hear signals) and**

selectivity **(ability to distinguish signals)**

Transceivers

What makes a good radio?

Remember, you can't work them if you can't hear them.

ARRL MENTOR PROGRAM

Transceivers

Common Controls Found On Amateur Radio Transceivers.

Multi function meter shows information at a glance

Use the meter like the speedometer in your car; don’t stare at it, but glance at it, making sure all things are proper.

Meter Functions

"S" or Signal strength – This indicates the relative strength of a received signal on a scale of 1 through 9. Strong signals are reported as dB over 9.

10 over 9. 20 over, etc.

Reading The S Meter

The receive signal on the meter here is 30 dB over S-9 or simply said, 30 over.

Meter Functions

RF POWER – This shows how much power the transmitter is putting out. MAX is good.

Meter Functions

SWR – This shows the Standing Wave Ratio of the antenna or how much power is being reflected back to the radio. 1:1 or MIN is good.

Meter Functions

ALC – This shows the condition of the Automatic Limiting Control circuitry.

You want to make sure that you are not overdriving your transmitter.

A good reading is when the peaks top the scale and stay within the range marked on the meter scale.

What Are All Those Knobs?

VFO –

Variable Frequency Oscillator.

This is the main tuning knob used to tune in a station. This tunes your transmit and receive frequency that is shown on the MAIN DISPLAY.

Controls

AF (gain) – Audio Frequency gain. This is the VOLUME control for the receiver.

Controls

RF GAIN – This allows you to adjust the gain of the receiver amplifier circuits.

It allows you to make the circuits less sensitive so that you can dampen really strong signals.

Controls

By changing the gain in the receiver circuits you can lower the noise floor and effectively improve the *signal to noise ratio*, thus improving your ability to hear weaker signals.

Controls

When you adjust the RF GAIN it is normal to see the “S” METER rise.

Controls

MIC GAIN- This controls the loudness of the microphone in any voice mode.

It is best to adjust this for a good “in range” reading on the ALC meter.

Controls

MODE – This allows you to choose the mode of operation for your transceiver.

- **CW – Continuous Wave (Morse code)**
- **USB – Upper Sideband**
- **LSB – Lower Sideband**
- **RTTY – Radio Teletype**

Controls

RIT – This stands for Receive Incremental Tuning and is used to fine tune a station you are listening to without changing your transmit frequency. This is sometimes called a Clarifier.

Controls

XIT- This is the same as RIT but it adjusts your transmit frequency. It is Transmit Incremental Tuning.

Controls

RF PWR – This adjusts the amount of transmitter power.

Controls

IF SHIFT - This shifts the center of the receiver's pass band.

Pronounced "eye eff", it stands for Intermediate Frequency

Controls

Shifting the IF allows you to avoid a signal that is close to yours by not letting it in the "window" of the receiver's pass band.

Controls

NOTCH – This is another good filter for reducing nearby interference. Unlike a window, it acts like a cover and blocks the signal that is in your window.

Antennas

Antennas

Now calm down.

You don’t need an antenna farm like the one shown at N5AU to have fun on HF.

Antennas

When we talk about our antennas we are actually talking about an *antenna system*.

BIG NOTE *

*An entire program can be had just on the discussion of antennas. Consideration should be given to safety and the type of operating that is being done, as well as spouse appeal.

End of Big Note.

Antennas

An antenna system consists of:

1. **The antenna or radiator**
2. **The feedline**
3. **The matching network or tuner**

SWR

- A good SWR is not an indicator of an effective antenna system.
- Click your heels and say this three times.

SWR

Think of a dummy load; it has a good SWR but it is not an effective antenna.

Antennas

The dipole is the simplest antenna that any amateur can use on HF.

Whether fed with coax or open wire, dipoles are cheap and easy to build and install.

Antennas

A dipole fed with twin lead can be made to operate effectively on more than one band when using a good matching network.

Antennas

A dipole can be made for a single band. The total length of the antenna can be calculated by using the formula:

468 ÷ freq (MHz) = length in feet

Antennas

Each side, or leg, of the dipole is going to be one half of the total length.

Fed with 50 ohm coax, this antenna will be resonant on a single band that it was cut for.

The Dipole

Radiator, Feedline and matching network

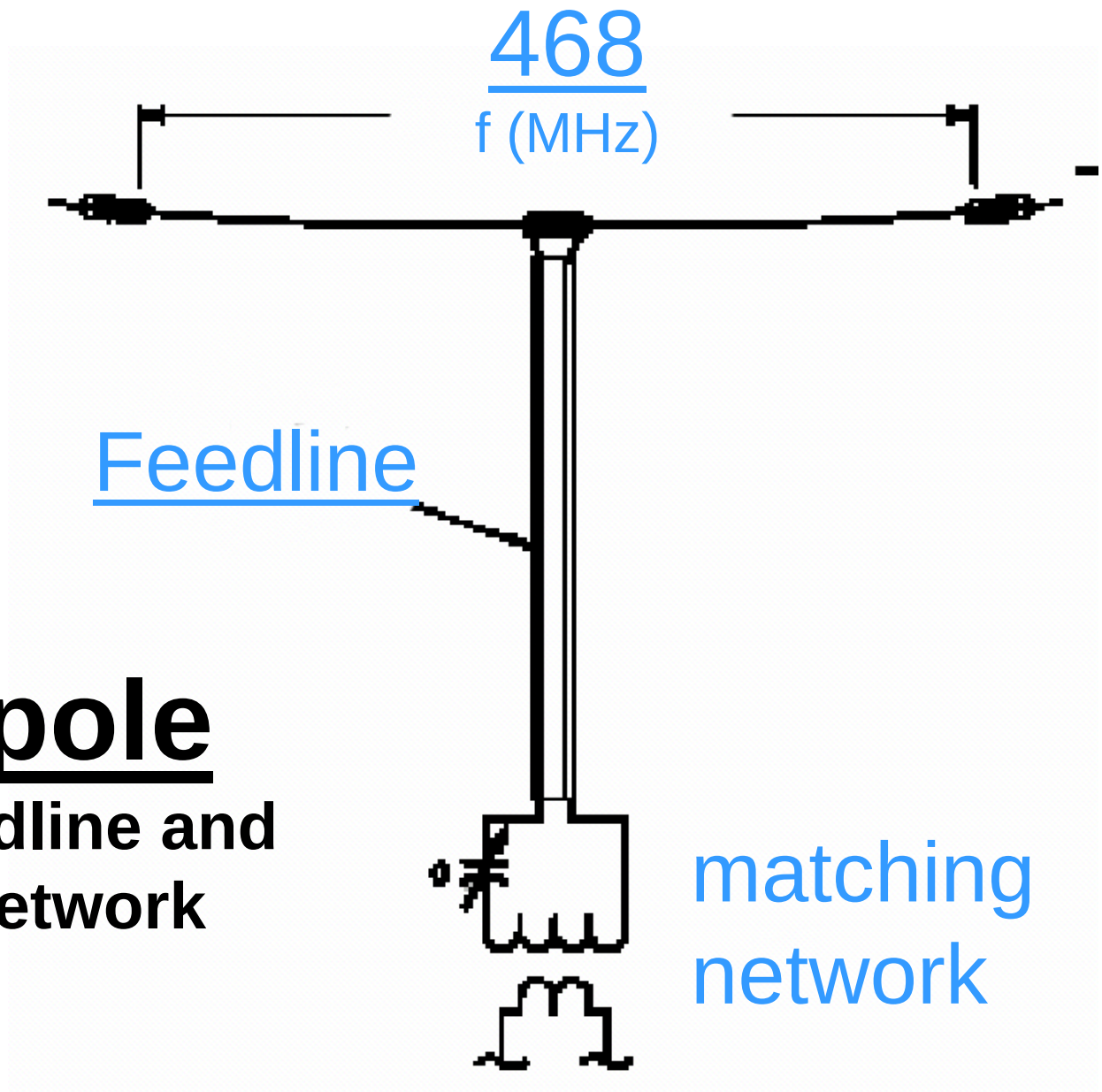

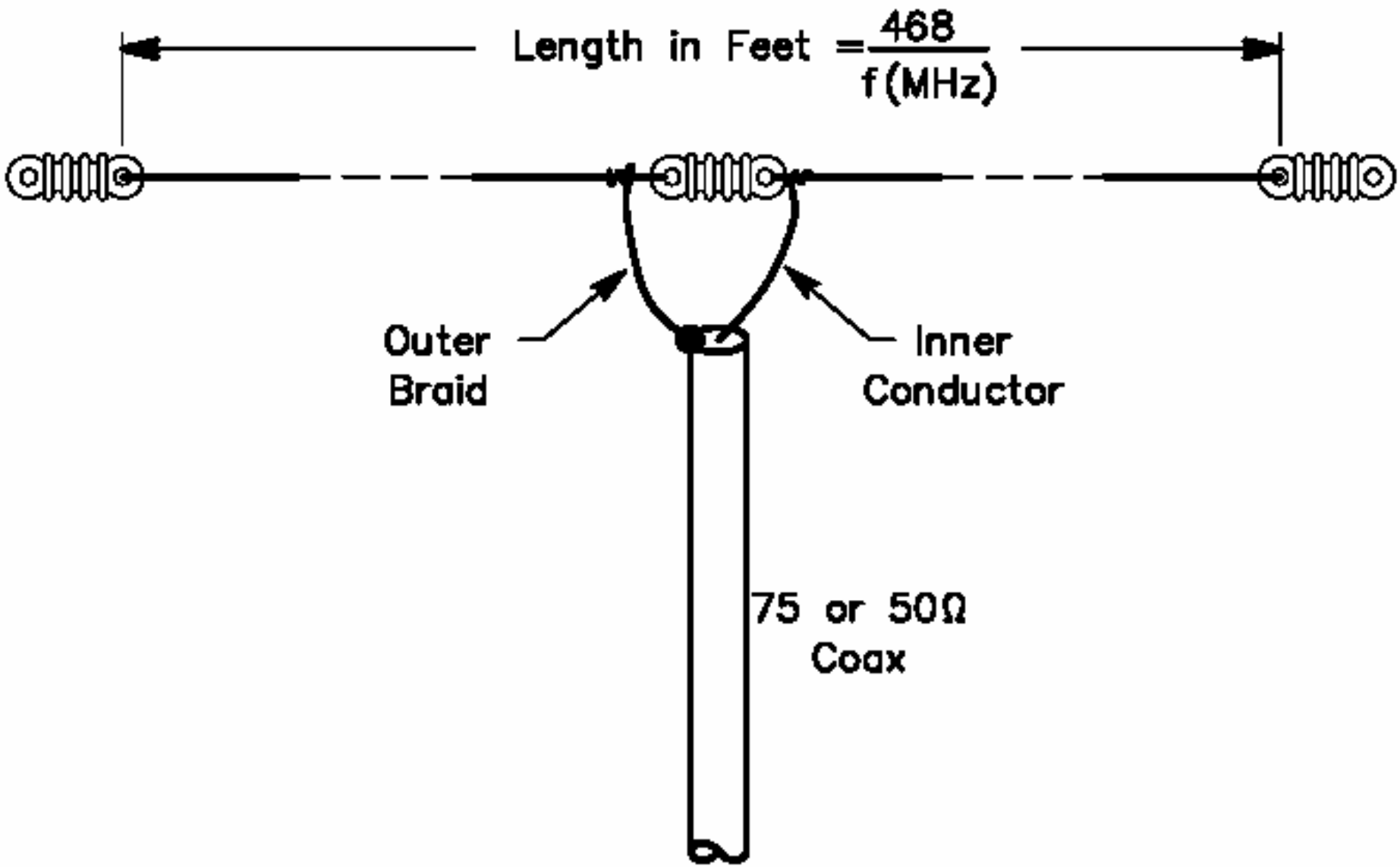
Length in Feet = 468 / f(MHz)
Outer Braid
Inner Conductor
75 or 50Ω Coax

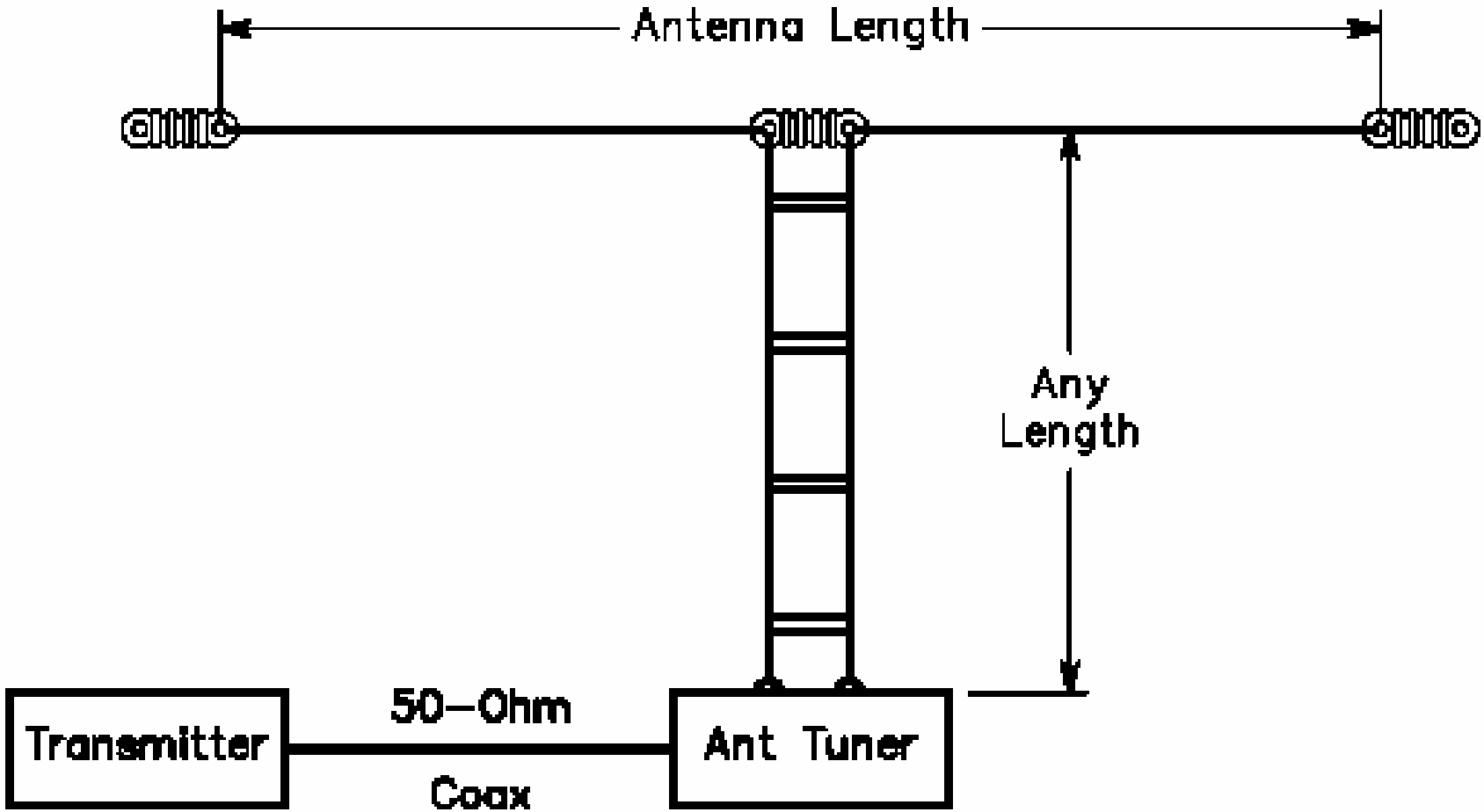

Fig 6—A center-fed antenna system for multiband use.

Antennas

It is not necessary to install dipoles in a horizontal straight line.

Antennas

Configurations include bent, drooping, inverted V and sloper.

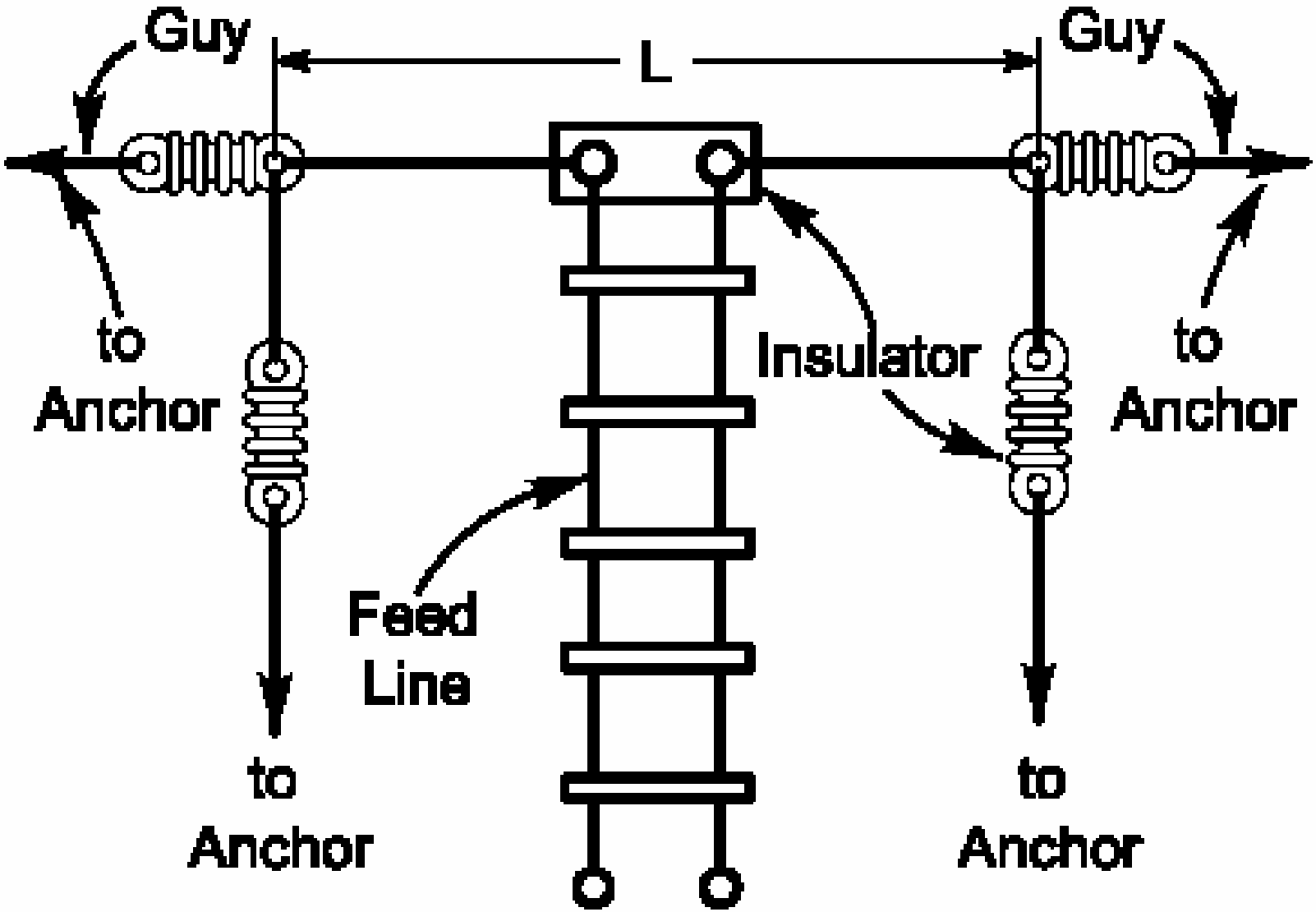
Guy
L
Guy
to
Anchor
Insulator
to
Anchor
Feed
Line
to
Anchor
to
Anchor

Bent Dipole

“Inverted V”

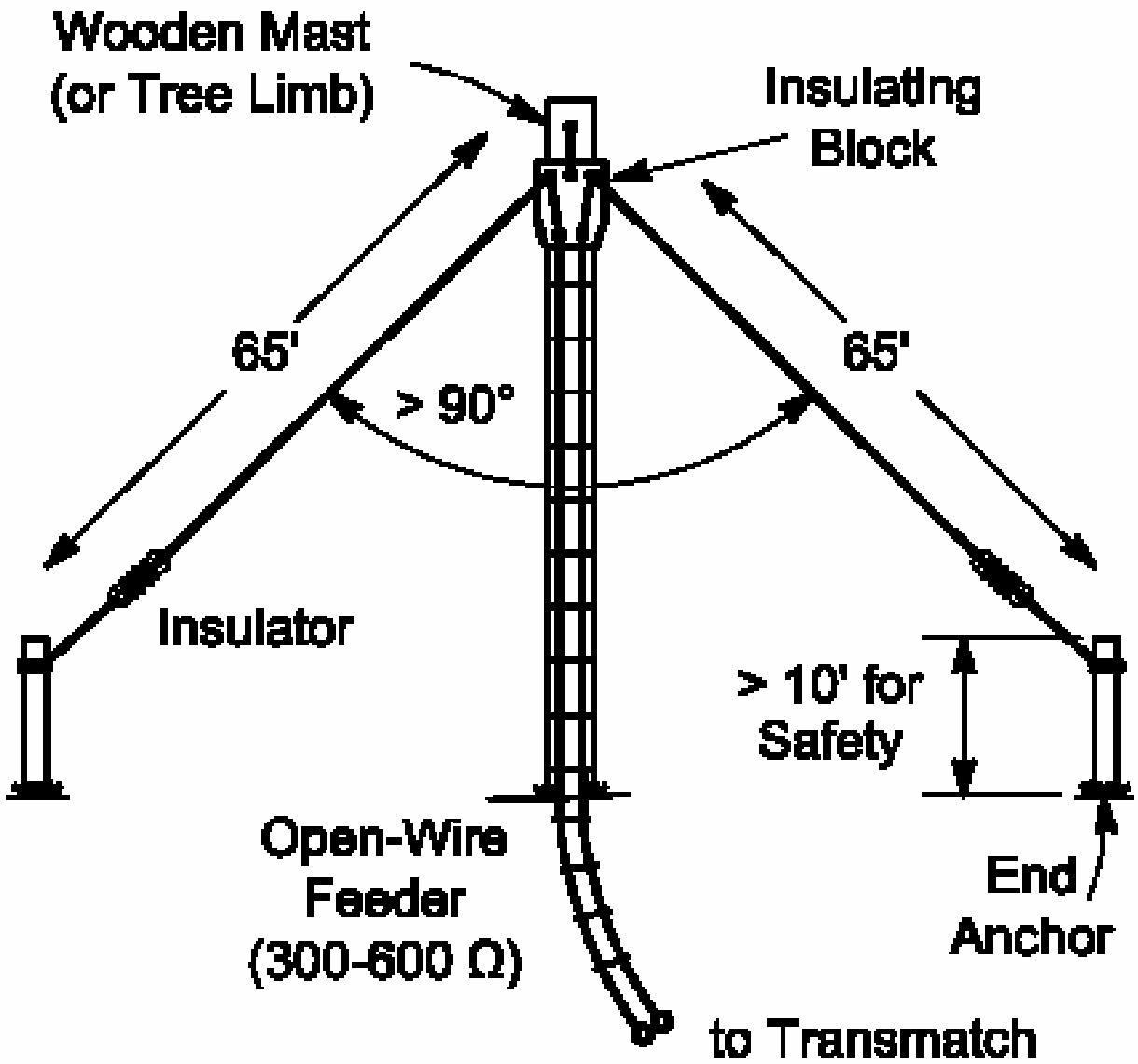
Wooden Mast
(or Tree Limb)
Insulating
Block
65'
65'
> 90°
Insulator
> 10' for
Safety
Open-Wire
Feeder
(300-600 Ω)
End
Anchor
to Transmatch

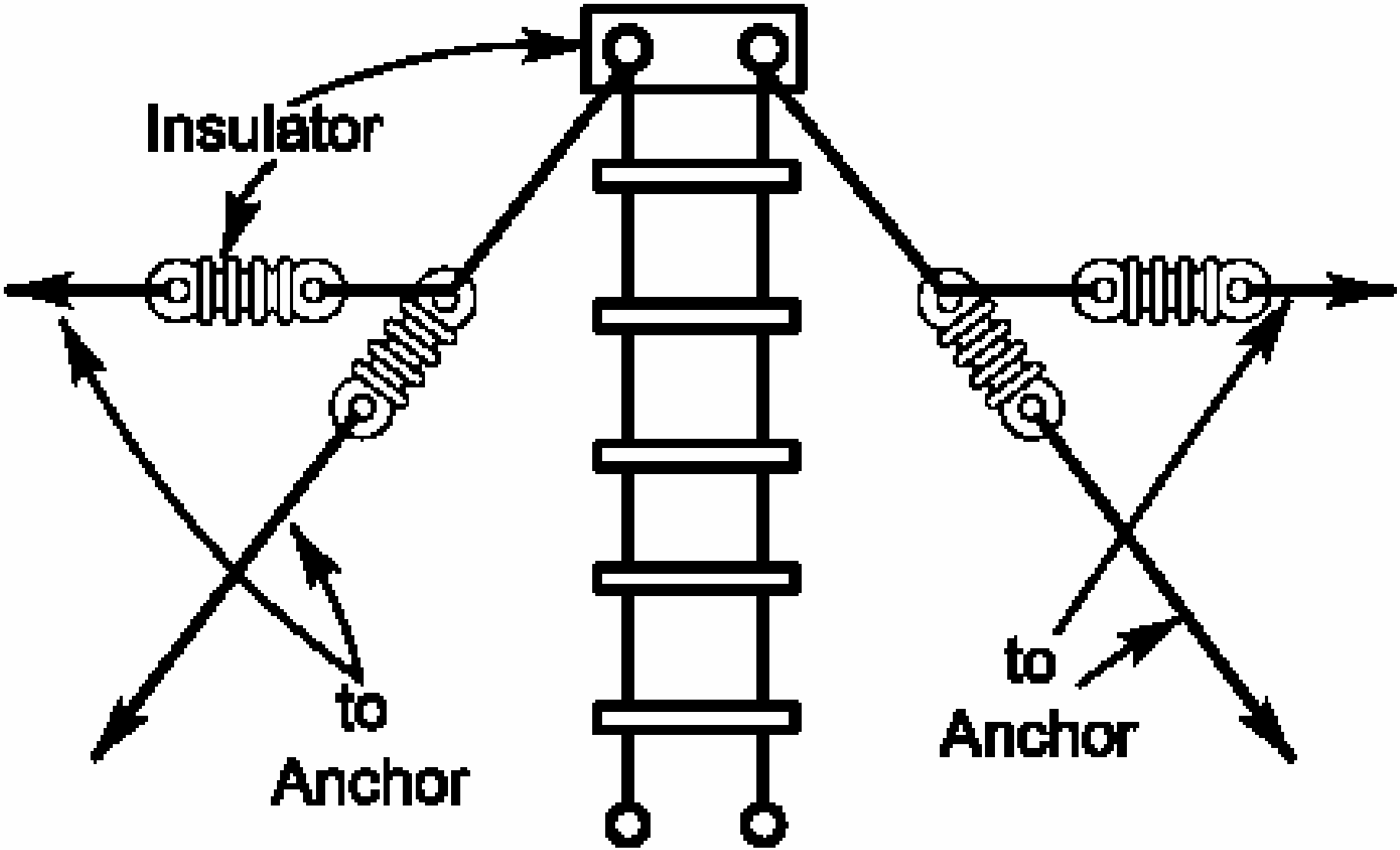

Bent Drooping Dipole

Sloper

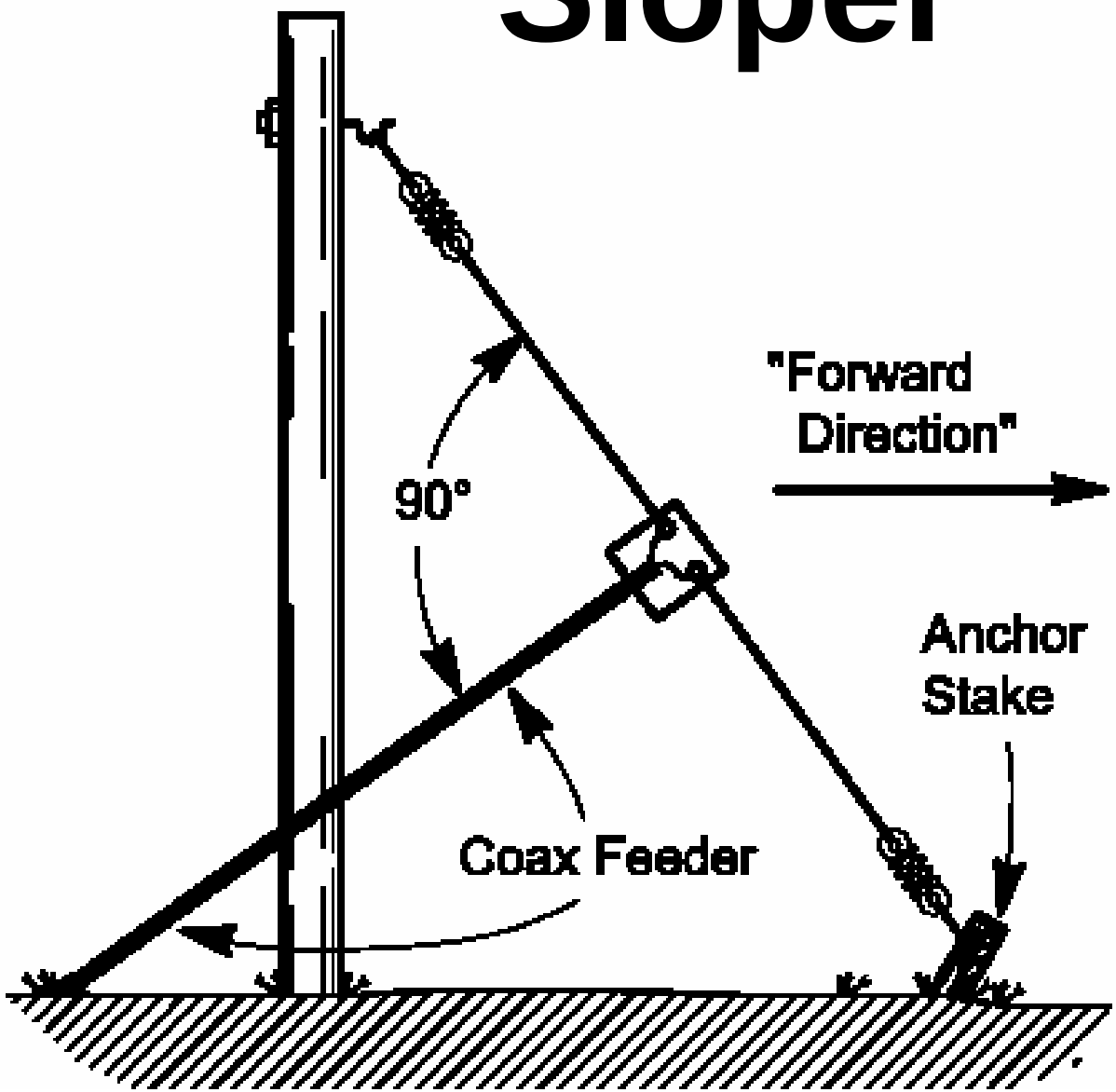

Antennas

The tri-band Yagi or beam antenna is popular among a lot of HF operators.

Even a modest 3 element model at heights as low as 40 ft can greatly improve your signal.

Antennas

Many hams have earned their DXCC award using a small tri-band beam and 100 watts of power.

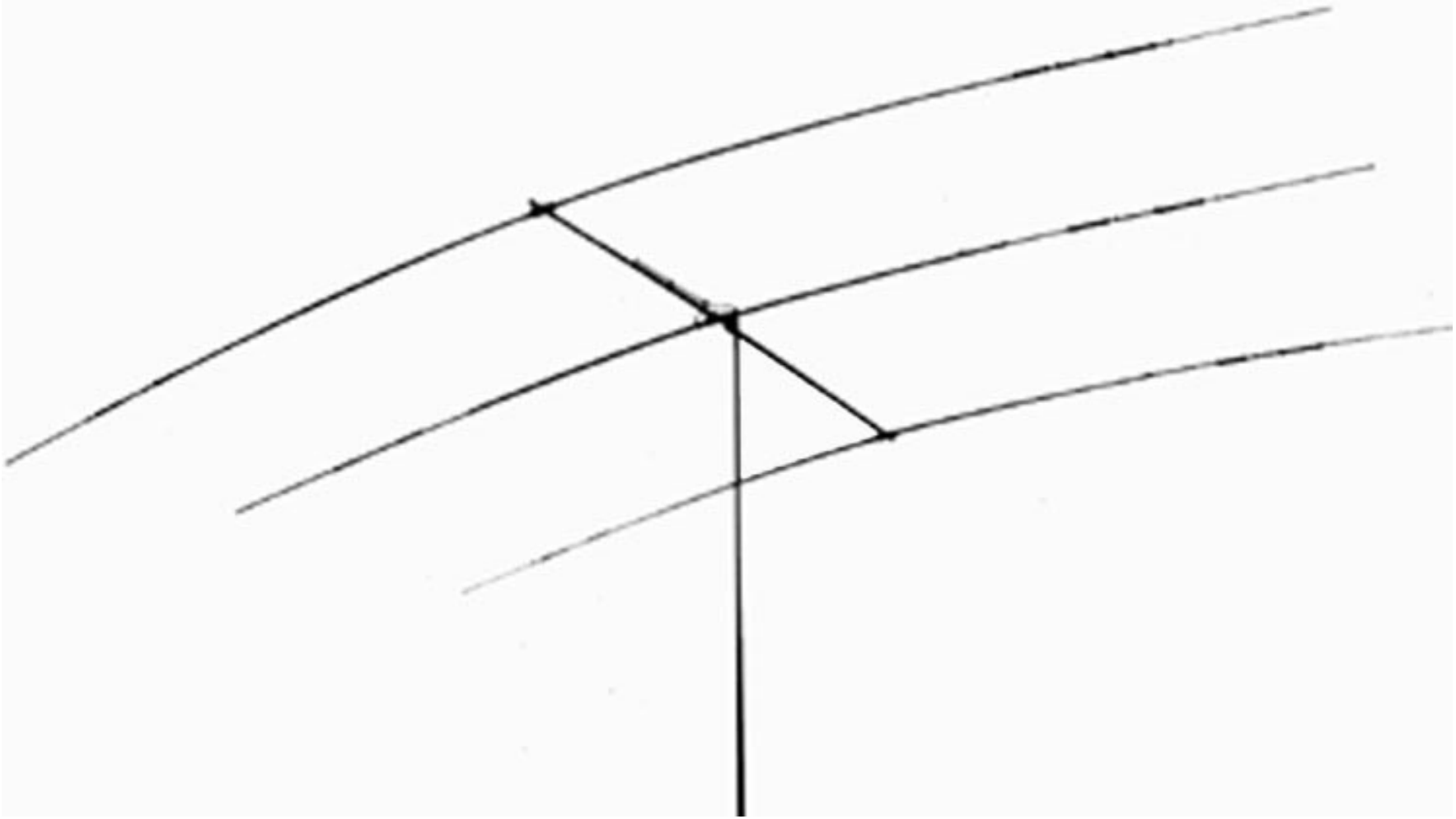

Three Element Tri-band Yagi

Antennas

Vertical Antennas

It is recommended that you read about vertical antennas in the ARRL Antenna Book before installing one.

Antennas

Many hams new to HF can become disappointed by vertical antennas because they don’t understand how they work or listen to myths about them.

- Vertical antennas are excellent low angle radiators.
- Ground mounted verticals require an extensive radial system.
- Elevated mono-band verticals only require 4 radials to be effective.

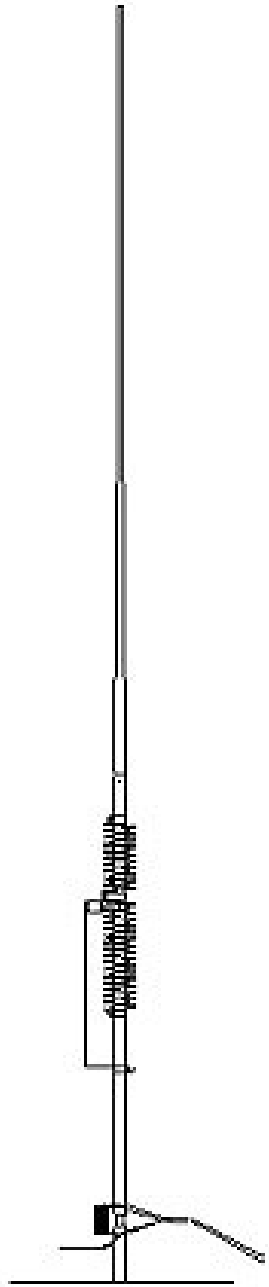

Antennas

Vertical antennas are excellent low angle radiators and are great for DXing.

A lot of big gun stations have verticals in their arsenal of antennas.

Antennas

Large antenna arrays are extremely effective.

The down side is that they require a lot of space, they're expensive and they require periodic maintenance and safety inspections.

W1AW

One of the towers at ARRL Headquarters. This 120 foot tower stands well above the local tree line and has lots of aluminum on it.

Antennas

As you become a more experienced operator you will modify and improve your antenna farm.

The most important thing now is to get a wire up and start having some fun.

Matching Networks

The terms antenna tuner, match box, Transmatch and antenna coupler, are all synonyms for a matching network.

Matching Networks

A matching network is a combination of inductance and capacitance used to cancel out unwanted reactance to better couple the transmitter power to the antenna.

Matching Networks

Most modern transceivers have built in antenna tuners or matching networks that will match the transmitter section to the antenna and feedline.

Matching Networks

Think of the matching network like the transmission in a car.

Matching Networks

While it is *possible* to connect the drive wheel directly to the engine, you will achieve a much more efficient transfer of power by using a transmission.

Matching Networks

The matching network provides an efficient transfer of power from the transceiver to the antenna.

Matching Networks

However, the use of a matching network to achieve low SWR does not make a poor antenna radiate better.

Matching Networks

The most common matching networks are the T- network, the Pi-network and the L-network.

L-Network

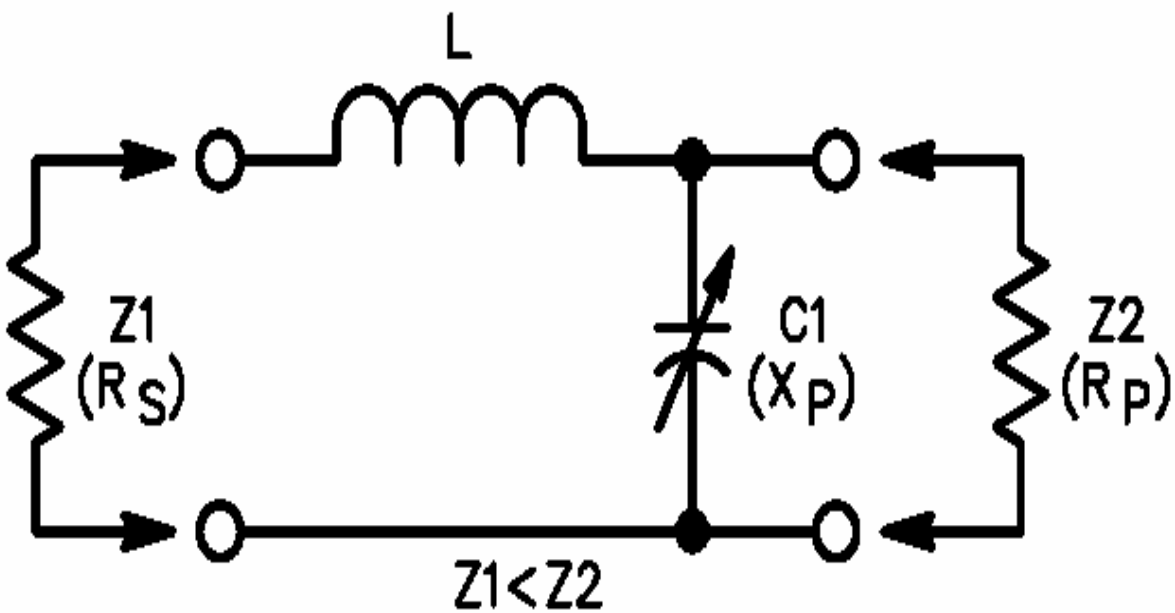

ARRL MENTOR PROGRAM

Pi-Network

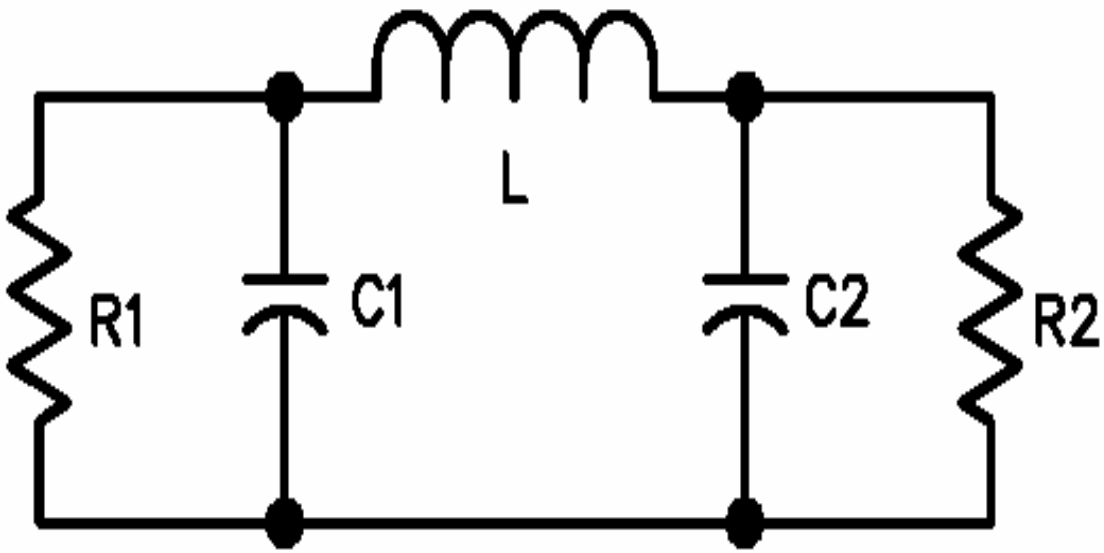

T-Network

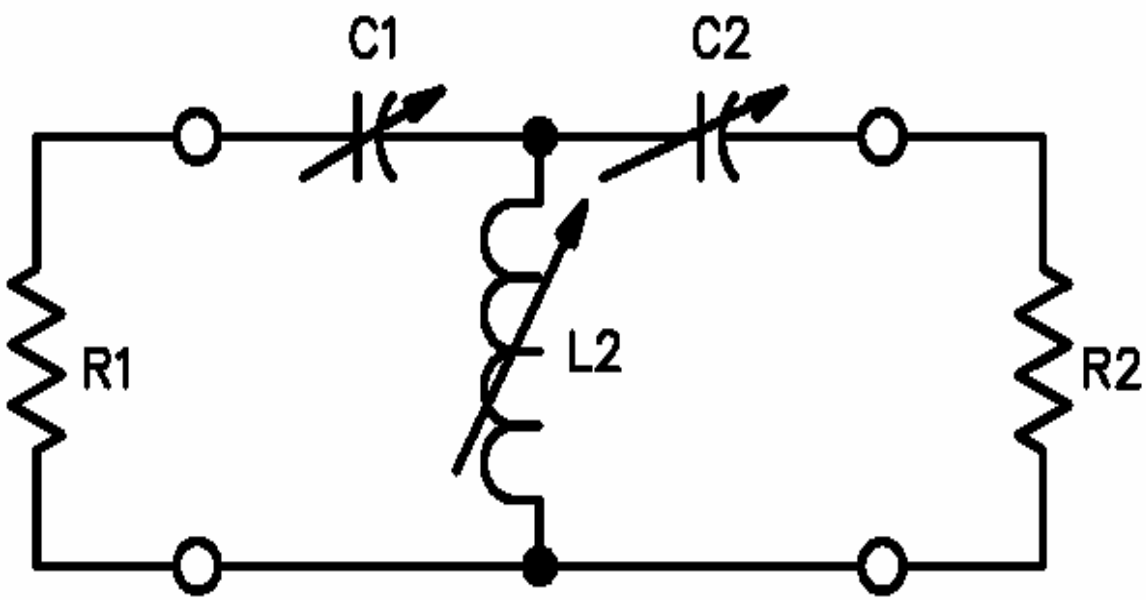

Feedline

The line that connects the antenna to the radio is called the *feedline*.

Feedline

For the purpose of this demonstration we will only mention 50 ohm coax (unbalanced) and balanced *ladderline* or *twin lead*.

Feedline

Most hams use 50 ohm coax to feed their antennas.

It is easy to use and requires no special handling to bring it into the shack.

Feedline

Because of the 50 ohm impedance of the coax it matches the output of all modern transceivers.

Feedline

In addition to matching the transceiver output, the 50 ohm coax also closely matches the feedpoint impedance of a resonant dipole.

Feedline

Twin lead or ladderline is used on mono- or multi-band antennas.

Because it is balanced, it has no feedline losses.

Feedline

When used with a good tuner, a dipole fed with ladderline can be a very effective all band *antenna system.*

Safety

- Electrical Safety
- RF Safety
- Physical Safety

Grounding

For safety and to prevent interference, your station should be well grounded.

Grounding

A good general statement is to have an earth ground using an 8 foot ground rod as close to the equipment as possible.

Grounding

Avoid grounding to water pipes and such.

<u>NEVER</u> connect a ground to a gas pipe.

Grounding

All equipment, should be grounded to a common point and then connected to the ground rod.

DO NOT "*daisy chain*" or ground equipment to each other.

Grounding

All antennas and antenna support structures (masts and towers) must be grounded.

Grounding

All ground leads should be as short as possible and made with heavy gauge wire or wide copper strap.

Grounding

Please refer to the ARRL handbook for additional information on station grounding.

RF Safety

As a licensed Amateur Radio operator you are required to know about RF exposure.

RF Safety

Most 100 watt stations will not have any difficulty in meeting FCC exposure requirements.

RF Safety

However it is your responsibility to verify proper installation and operation of your station equipment and antennas.

RF Safety

Complete information about RF safety can be found on the ARRL website

http://www.arrl.org/tis/info/rfexpose.html

Or in the ARRL publication

“RF Exposure and You” by Ed Hare, W1RFI

Physical Safety

<u>NEVER attempt to erect antennas near powerlines. You will be killed.</u>

Physical Safety

Always use safety equipment when climbing towers or roofs.

Keep all ladders on solid surfaces.

Physical Safety

Don't work alone.

It is a good idea to have a helper when trying to hang wires or climb towers.

Get On The Air

Experienced HF operators in your local club will be able to advise you when you as you build your station.

Get On The Air

DX and contesting clubs are good sources of information for HF operating.

Get On The Air

Contests & Operating Events

Participation in operating events will improve your skills and enhance your operating pleasure.

Get On The Air

These events also provide opportunities to find ways to improve your station.

Get On The Air

Awards

There are many awards available for the HF operator to earn.

Get On The Air

Awards

The most coveted is the DX Century Club or *DXCC*, awarded for making contact with 100 countries.

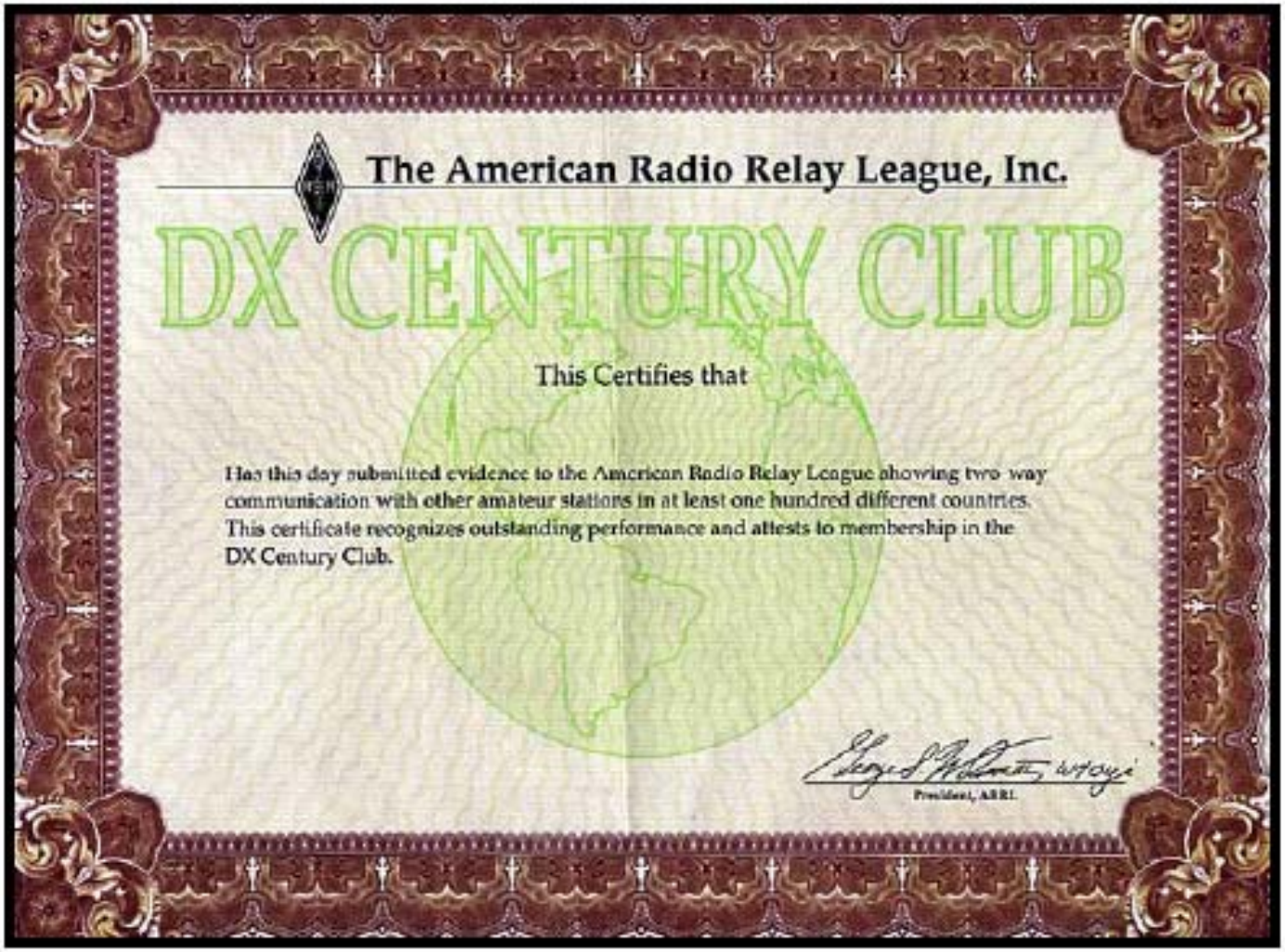
The American Radio Relay League, Inc.

DX CENTURY CLUB

This Certifies that

Has this day submitted evidence to the American Radio Relay League showing two-way communication with other amateur stations in at least one hundred different countries. This certificate recognizes outstanding performance and attests to membership in the DX Century Club.

President, ARRL

Fig 2.1 — One of the most prized awards in Amateur Radio: the DX Century Club.

Get On The Air

Awards

There are many other awards including the Worked All States (WAS) award for contacts with all 50 U.S States.

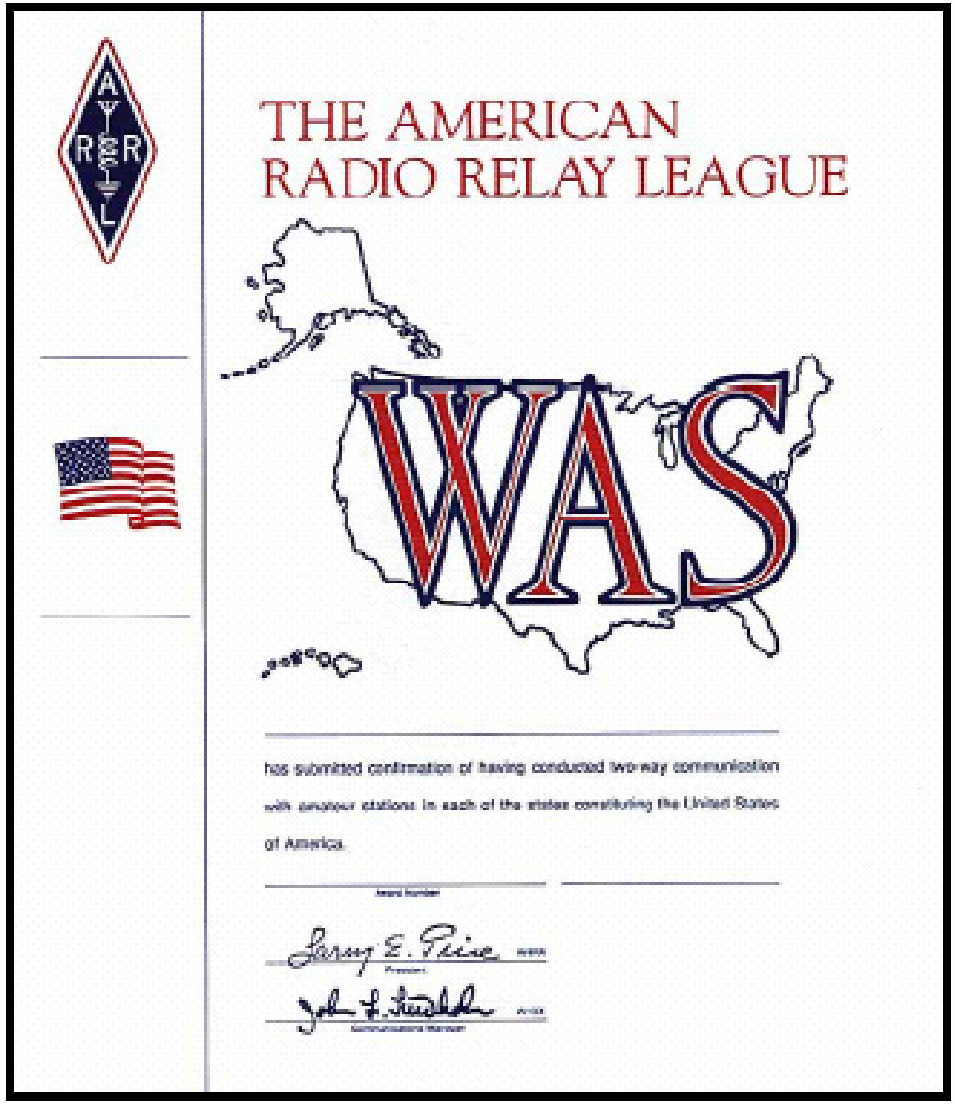

Fig 2.2 — Work one station in each of the 50 states and you're eligible for the ARRL's Worked All States (WAS) award.

Get On The Air

Choosing the band or mode of operation is up to you.

Listen for activity on all the bands; 40m – 10m during the day, 160m, 80m & 40m at night.

Get On The Air

Now that you have the basics of HF operating, it’s time to get on the air and start having fun.

ARRL MENTOR PROGRAM

Publications

ARRL General Class License Manual

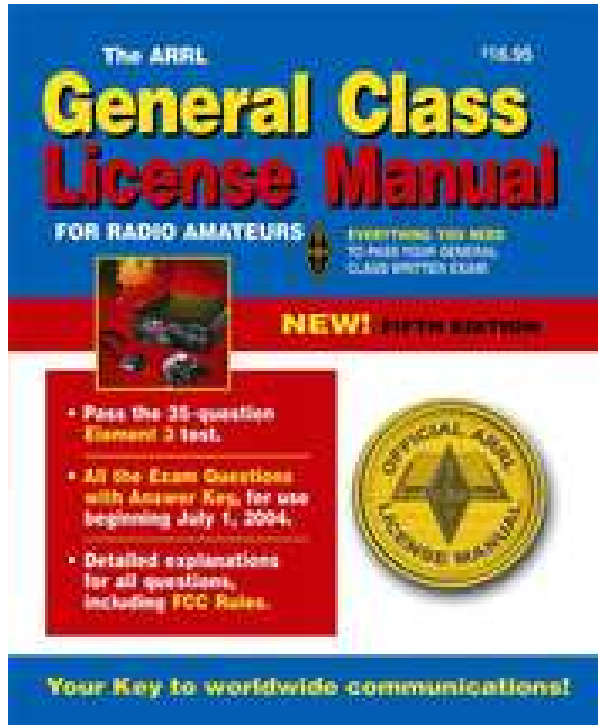

http://www.arrl.org/catalog/lm

ARRL MENTOR PROGRAM

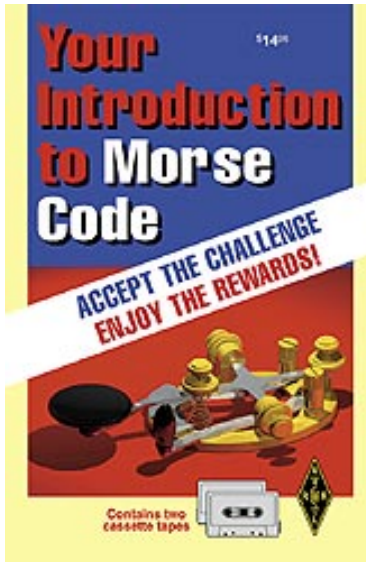

Morse Code Study Materials

http://www.arrl.org/catalog/lm

Publications

ARRL Handbook

http://www.arrl.org/catalog/?item=9280

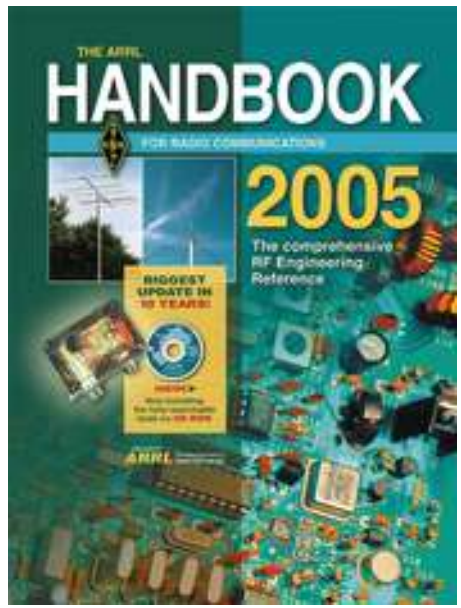

Publications

ARRL Antenna Book

http://www.arrl.org/catalog/?item=9043

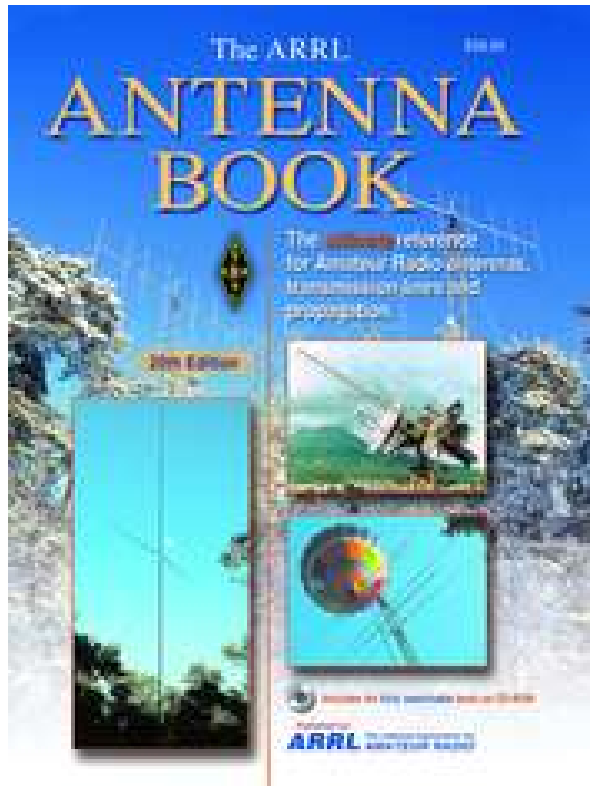

ARRL MENTOR PROGRAM

Publications

ON4UN's Low-Band DXing Antennas, Equipment and Techniques for *DXcitement* on 160, 80 and 40m

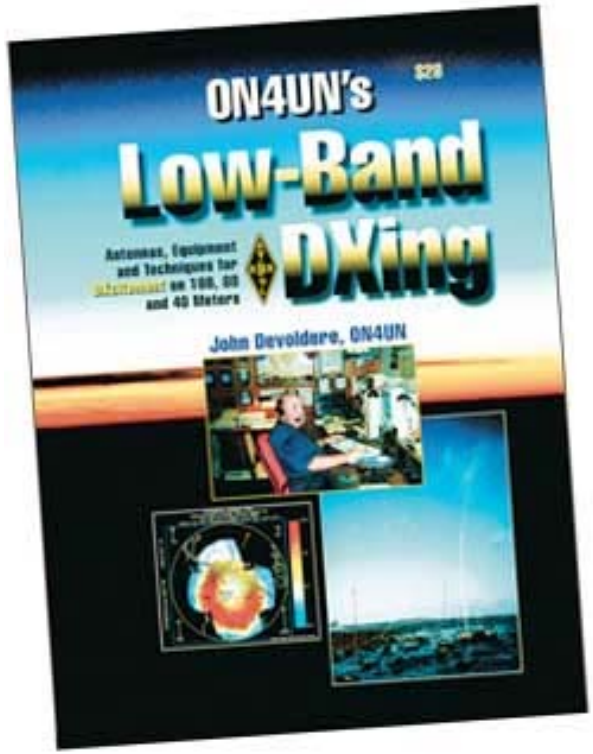

http://www.arrl.org/catalog/7040/

Publications

The Complete DX'er
by Bob Locher, W9KNI

http://www.arrl.org/catalog/?item=9073

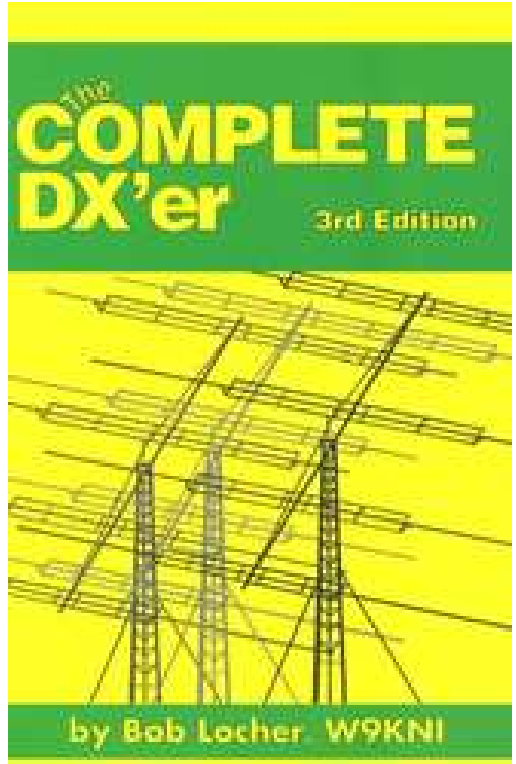

Publications
On the Air with Ham Radio

By Steve Ford, WB8IMY

http://www.arrl.org/catalog/?item=8276

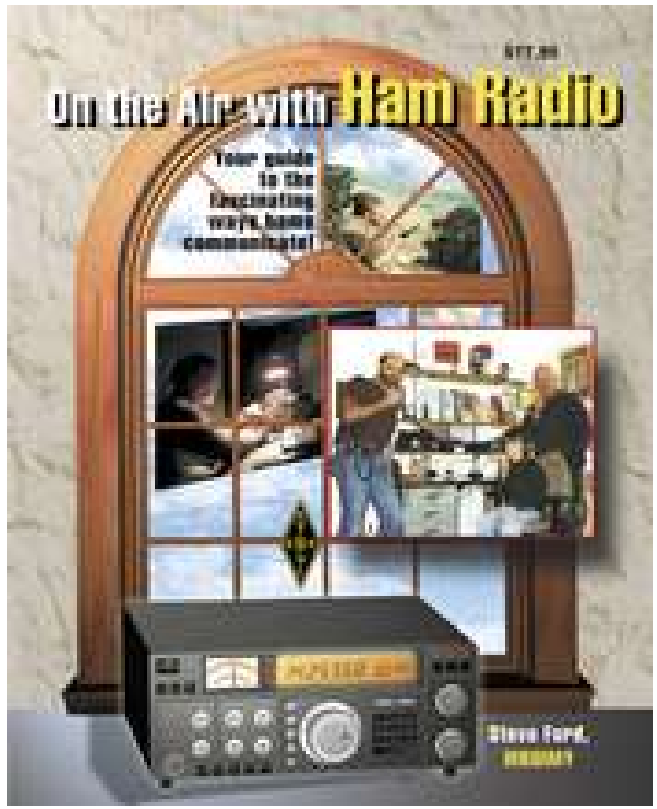

Publications

RF Exposure and You
By Ed Hare, W1RFI

http://www.arrl.org/catalog/?item=6621

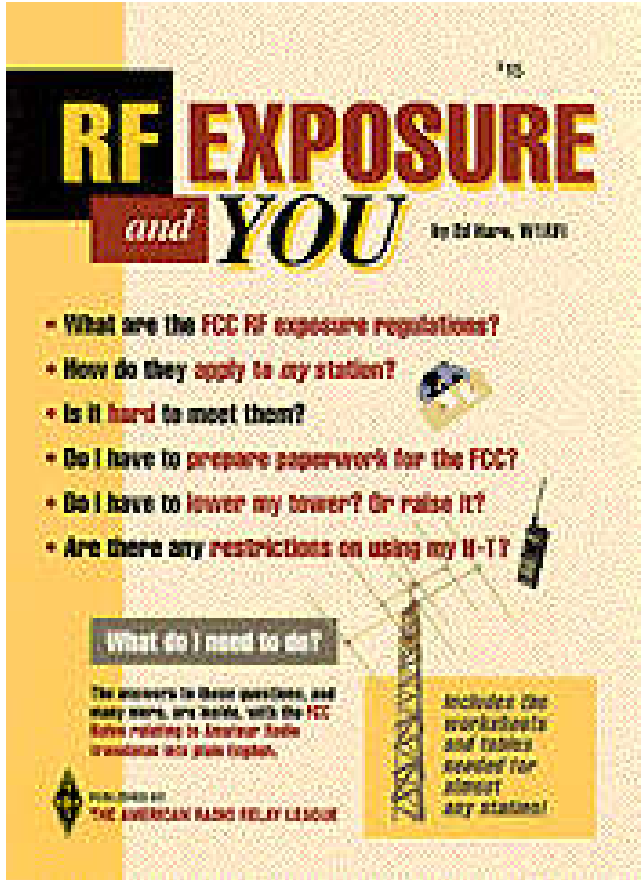

Contact

Norm Fusaro, W3IZ
ARRL Affiliated Clubs/Mentor
Program Manager
225 Main St. Newington, CT 06111
860-594-0230
w3iz@arrl.org